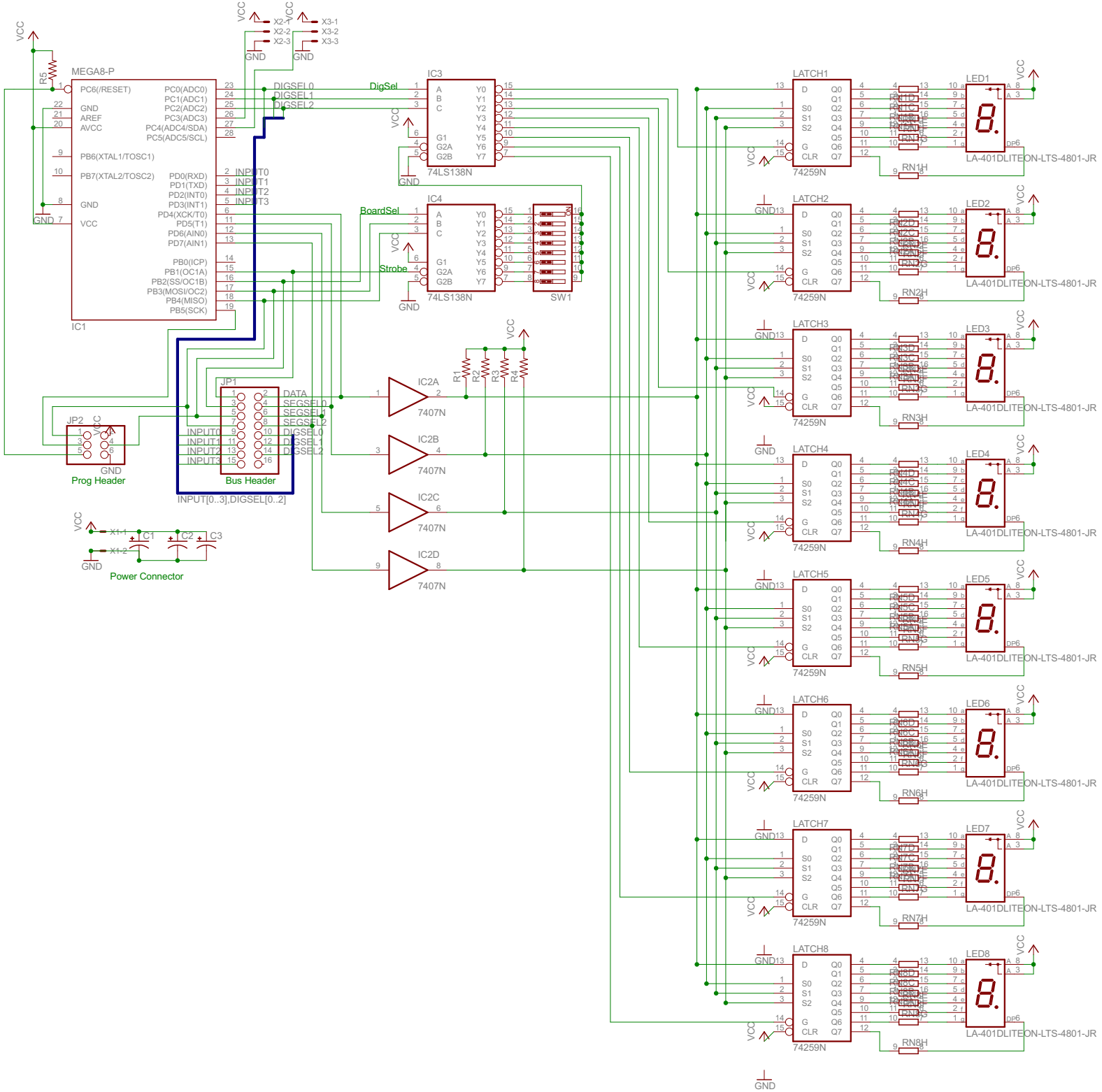
MEGA8-P
IC1
PC6(/RESET)
GND
AREF
AVCC
PB6(XTAL1/TOSC1)
PB7(XTAL2/TOSC2)
GND
VCC
PC0(ADC0)
PC1(ADC1)
PC2(ADC2)
PC3(ADC3)
PC4(ADC4/SDA)
PC5(ADC5/SCL)
PD0(RXD)
PD1(TXD)
PD2(INT0)
PD3(INT1)
PD4(XCK/T0)
PD5(T1)
PD6(AIN0)
PD7(AIN1)
PB0(ICP)
PB1(OC1A)
PB2(SS/OC1B)
PB3(MOSI/OC2)
PB4(MISO)
PB5(SCK)
R5
DIGSEL0
DIGSEL1
DIGSEL2
INPUT0
INPUT1
INPUT2
INPUT3
DigSel
BoardSel
Strobe
IC3
IC4
74LS138N
SW1
JP1
Bus Header
INPUT[0..3],DIGSEL[0..2]
DATA
SEGSEL0
SEGSEL1
SEGSEL2
JP2
Prog Header
IC2A
IC2B
IC2C
IC2D
7407N
R1
R2
R3
R4
X1-1
X1-2
C1
C2
C3
Power Connector
X2-1
X2-2
X2-3
X3-1
X3-2
X3-3
LATCH1
LATCH2
LATCH3
LATCH4
LATCH5
LATCH6
LATCH7
LATCH8
74259N
RN1H
RN2H
RN3H
RN4H
RN5H
RN6H
RN7H
RN8H
LED1
LED2
LED3
LED4
LED5
LED6
LED7
LED8
LA-401DLITEON-LTS-4801-JR