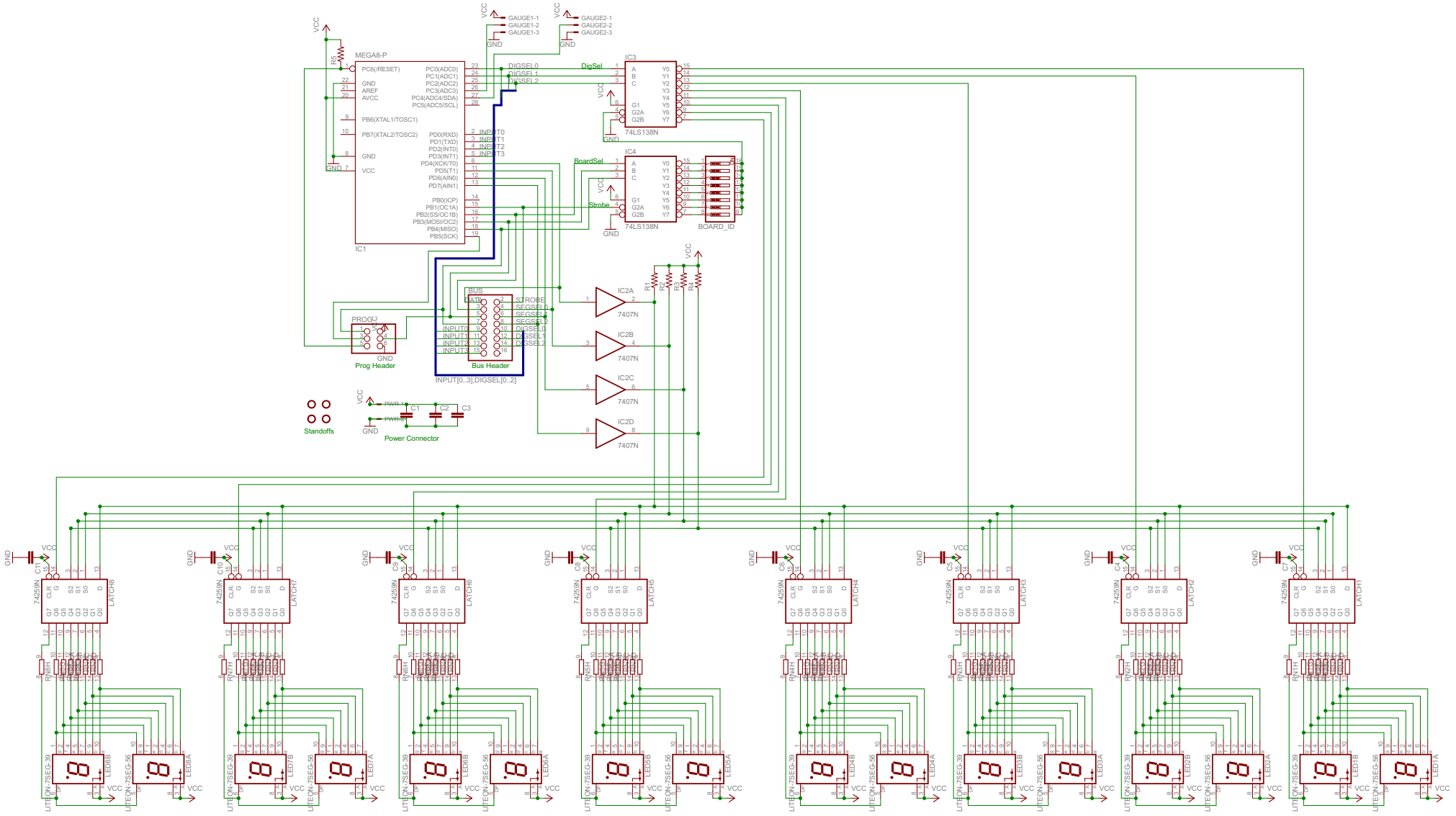
MEGA8-P
IC1
PC6(/RESET)
GND
AREF
AVCC
PB6(XTAL1/TOSC1)
PB7(XTAL2/TOSC2)
VCC
PC0(ADC0)
PC1(ADC1)
PC2(ADC2)
PC3(ADC3)
PC4(ADC4/SDA)
PC5(ADC5/SCL)
PD0(RXD)
PD1(TXD)
PD2(INT0)
PD3(INT1)
PD4(XCK/T0)
PD5(T1)
PD6(AIN0)
PD7(AIN1)
PB0(ICP)
PB1(OC1A)
PB2(SS/OC1B)
PB3(MOSI/OC2)
PB4(MISO)
PB5(SCK)
GAUGE1-1
GAUGE1-2
GAUGE1-3
GAUGE2-1
GAUGE2-2
GAUGE2-3
DIGSEL0
DIGSEL1
DIGSEL2
INPUT0
INPUT1
INPUT2
INPUT3
DigSel
IC3
74LS138N
BoardSel
IC4
Strobe
BOARD_ID
BUS
DATA
STROBE
SEGSEL0
SEGSEL1
SEGSEL2
DIGSEL0
DIGSEL1
DIGSEL2
Bus Header
INPUT[0..3],DIGSEL[0..2]
PROG
Prog Header
IC2A
IC2B
IC2C
IC2D
7407N
Standoffs
PWR1
PWR2
C1
C2
C3
Power Connector
74259N
LATCH8
LATCH7
LATCH6
LATCH5
LATCH4
LATCH3
LATCH2
LATCH1
LITEON-7SEG-39
LITEON-7SEG-56
LED8B
LED8A
LED7B
LED7A
LED6B
LED6A
LED5B
LED5A
LED4B
LED4A
LED3B
LED3A
LED2B
LED2A
LED1B
LED1A